March-April 2020
ISSN: 0193-4120 Page No. 11236 - 11246

Synthesis of the Neuro-Fuzzy Adaptive Control System of a Dynamic Object

I.Kh.Siddikov[1], Sh.I.Fayziev[2], Kh.B.Ismoyilov[2] , S.K.Uvayzov[2]
[1]*Tashkent State Technical University*
[2]Bukhara Engineering-Technological Institute

Article Info
Volume 83
Page Number: 11236 - 11246
Publication Issue:
March - April 2020

Article History
***Article Received**: 24 July 2019*
***Revised**: 12 September 2019*
***Accepted**: 15 February 2020*
***Publication**: 15 April 2020*

Abstract:
In this scientific work, the method for creating an adaptive control system of the discrete dynamic object, which contains a compensator, emulator, and controller, based on the Sugeno fuzzy model and allowing eliminating the influence of disturbances and control error is purposed. Algorithms for parametric and structural identification are synthesized, which, along with the method of back propagation of errors, were used to adapt neuro-fuzzy models. The proposed hybrid models based on neural networks and fuzzy logic allow ensuring the high process efficiency and controlling quality.

***Keywords**: Adaptive Control, Suegno Fuzzy model, Neuro-fuzzy Model.*

Introduction:

Actually existing industrial objects operate in conditions of uncertainty, which are characterized by complex and poorly studied connections between technological variables, measured with a large error of disturbing influences and nonrandom interference. Due to the nonlinearity of the characteristics, the possibilities of well-known linear algorithms for adaptive control of dynamic objects under conditions of uncertainty are sharply narrowed [1]. To control such objects, neural and fuzzy regulators [2,3], based on knowledge and built on the basis of neural networks and fuzzy logic, are increasingly used.

Hybrid models that implement the positive properties of neural networks and fuzzy logic have shown the high efficiency of neuro-fuzzy control systems. In such a system, the object of control and regulator are described by fuzzy adaptive models, which are a kind of multilayer neural network, the structure of which is formed on the basis of the analysis of technological variables and the nature of the connections between them with the possibility of tuning to changing production conditions using the method of back error propagation.

The problem of stabilization of the output variable $y(i+1)$ of a discrete dynamic object, described by a difference equation, is considered

$$y(i+1) = f(y(i),...,y(i-r),\bar{x}(i),... \\ \bar{x}(i-s),u(i),...,u(i-q)), \quad (1.1)$$

where $i = 0,1,2,...,N$ - current discrete time; $y(i)$ - output signal, $\bar{x}(i) = (\bar{x}_1(i),...,\bar{x}_k(i))$ - disturbance vector; $u(i)$ - control; $f(y(i),...,y(i-r),\bar{x}(i),...,\bar{x}(i-s),u(i),...,u(i-q))$ - some nonlinear function having certain orders r, s, q .

The input coordinates of the object are limited at any moment of time, i.e.

$$u^{\min} \le u(i) \le u^{\max}, \\ \bar{x}^{\min} \le \bar{x}(i) \le \bar{x}^{\max}, i = \overline{1,N}. \quad (1.2)$$

It is required to build control of the object (1.1), which provide an acceptable control error $e(i+1) = y^H - y(i+1)$ when constraints (1.2) are met, where y^H is the nominal output value.

METHODS AND MATERIALS

For these purposes, it is proposed to use a neuro-fuzzy adaptive control system (Fig. 1), in which the

March-April 2020
ISSN: 0193-4120 Page No. 11236 - 11246

effects of disturbing influences are largely eliminated by the compensator, and the control error eliminated by $e(i+1)$ regulator. The emulator is a model of the object, designed to configure the controller. The perturbation compensator, the regulator, and the emulator are built based on the fuzzy Sugeno model, the simplified structure of which is shown in Fig. 1. The controller, compensator and emulator contain delay elements $z^{-\tau}, \tau = 1,2,...$ that form the value of the input and output variables with a delay.

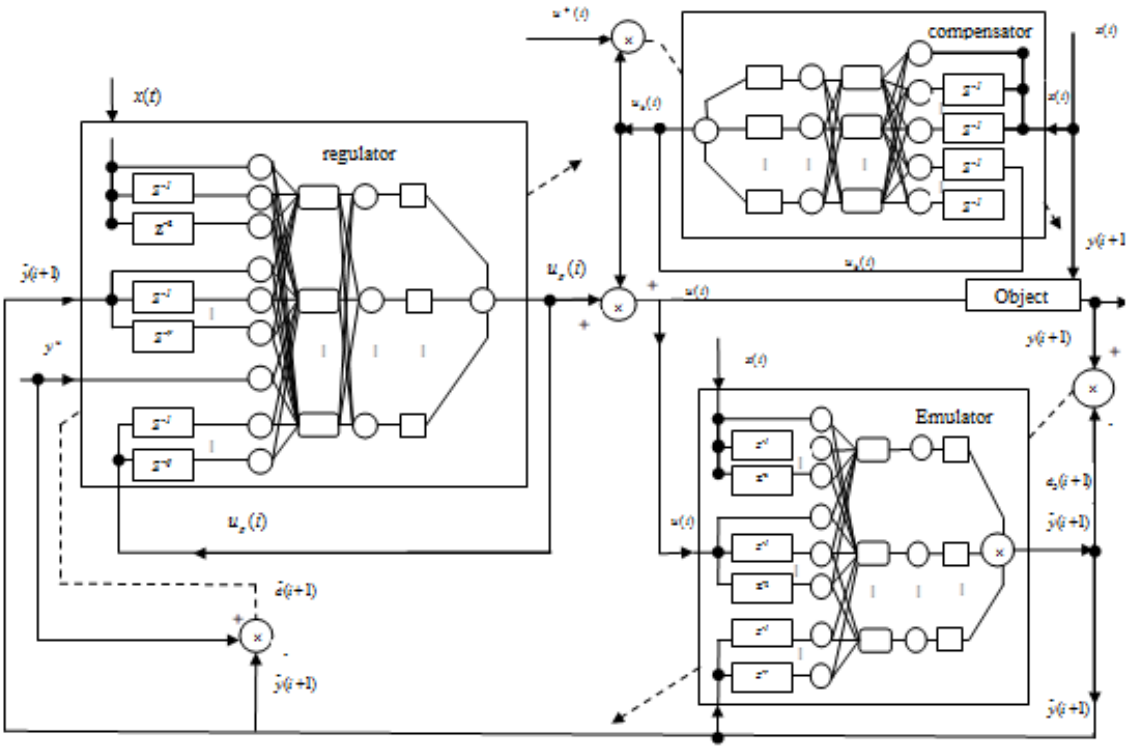

Fig. 1. The simplified structure of the neuro-fuzzy adaptive control system

As well as an object, the compensator is described by a nonlinear difference equation

$$\boldsymbol{u_k(i) = f_k(u_k(i-1),...,u_k(i-q_k),}$$
$$\boldsymbol{\bar{x}(i), x(i-1),...,x(i-s_k), \bar{c}_k),} \quad (2.1)$$

having orders q_k и s_k, differing in the general case from q and s. Here $u_k(i-1),...,u_k(i-q_k)$ - scalar control actions, $\bar{x}(i)$ - input disturbance vector of dimension ν and $\bar{c}_k$ – settings vector. For convenience, we combine variables $u_k(i-1),...,u_k(i-q_k), \bar{x}(i),...,x(i-s_k)$, i.e. replace them with an input vector $x_k(i) = (x_{k1}(i),..., x_{km}(i))$, having dimension $m = q_k + \nu(s_k+1)$. Then (2.1) can be rewritten like this

$$\boldsymbol{u_k(i) = f_k(\overline{x_k}(i), \overline{c_k}).} \quad (2.2)$$

As a difference equation (2.2) for the description of the compensator, an fuzzy Sugeno model is used [5], representing a set of rules

$$if \;\; x_{k1}(i) \;\; is \;\; X_{k1}^{\theta}$$
$$x_{k2}(i) \;\; is \;\; X_{k2}^{\theta},..., x_{km}(i) \;\; is \;\; X_{km}^{\theta},$$
$$then \;\; u_k^{\theta}(i) = b_{k0}^{\theta} + b_{k1}^{\theta} x_{k1}(i) + ... + b_{km}^{\theta} x_{km}(i),$$
$$\theta = \overline{1,n},$$
$$(2.3)$$

with fuzzy sets $X_{k1}^{\theta}, l = \overline{1,m}$ and linear connection connecting inputs $\overline{x_k}(i) = (x_{k1}(i), x_{k2}(i),..., x_{km}(i))$ and output $u_k^{\theta}(i)$.

The main characteristic defining the fuzzy set $X_к$ is the membership function $X_к(x_к)$, which has the form of a sigmoid

March-April 2020
ISSN: 0193-4120 Page No. 11236 - 11246

$$X_k(x_k) = (1+\exp(d_{k1}(x_k + d_{k2})))^{-1}. \qquad (2.4)$$

The mechanism for determining the output $u_k(i)$ according to the fuzzy model (2.3) when defining inputs $x_{kl}^0(i)$ at moment of time $i = 1,2,..., N$, membership functions $X_{kl}^0(x_{kl}(i))$ and coefficients $b_{k0}^\theta, b_{k1}^\theta,..., b_{km}^\theta, \theta = \overline{1,n}, l = \overline{1,m}$, linear equations

$$u_k^\theta(i) = b_{k0}^\theta + b_{k1}^\theta x_{k1}(i) + ... + b_{km}^\theta x_{km}(i), \quad \theta = \overline{1,n}, \qquad (2.5)$$

can be represented as an fuzzy five-layer neural network (Fig. 2).

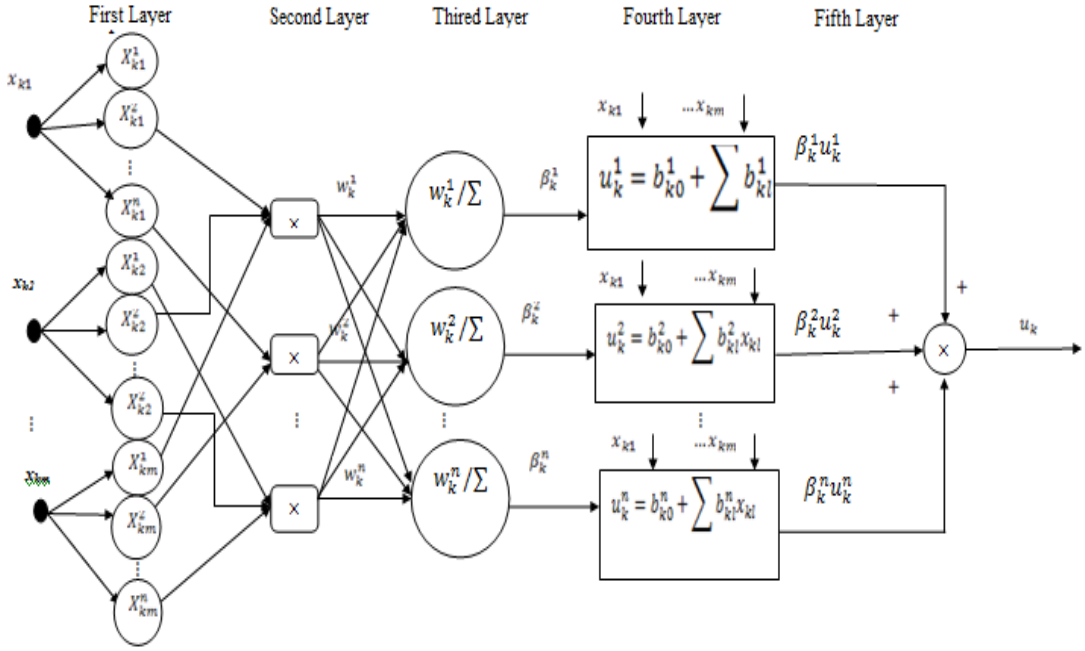

Fig. 2. The structure of the fuzzy five-layer neural network

In the first layer, membership degrees $X_{k1}^\theta(x_{k1}^0(i)),..., X_{km}^\theta(x_{km}^0(i))$ for that θth rule are calculated, and in the second layer, the truth values of premises w_k^θ by algebraic multiplication

$$w_k^\theta = X_{k1}^\theta(x_{k1}(i)) X_{k2}^\theta(x_{k2}(i))...X_{km}^\theta(x_{km}(i)). \qquad (2.6)$$

In the third layer, the relative normalized values of the truth of the premises are determined

$$\beta_k^\theta(i) = \frac{w_k^\theta(i)}{w_k^1(i) + w_k^2(i) + ... + w_k^n(i)}. \qquad (2.7)$$

In the fourth layer, the values $\beta_k^\theta(i)$ are multiplied by the output values $u_k^0(i)$, calculated according to linear equations (2.5) when setting the values $x_{k1}^0(i), x_{k2}^0(i),..., x_{km}^0(i)$.

In the last fifth layer, the total value $u_k(i)$ by all the rules is found as the weighted average $u_k^0(i)$

$$u_k(i) = \sum_{\theta=1}^{n} \beta_k^\theta(i) u_k^\theta(i). \qquad (2.8)$$

In an fuzzy compensator model, the vector of setting parameters $\overline{c_k}$ is made up of coefficients $b_{kl}^\theta, l = \overline{0,m}$, linear equations (2.5) and parameters $d_{k1,l}^\theta, d_{k2,l}^\theta, l = \overline{1,m}, \theta = \overline{1,n}$ of membership functions.

At the beginning, the adjustment of the compensator model is carried out according to the available data and consists in determining the number of fuzzy rules n by the structural identification algorithm ψ_n, linear equation coefficients $b_{kl}^0, \theta = \overline{1,n}$, $l = \overline{0,m}$, the parametric

March-April 2020
ISSN: 0193-4120 Page No. 11236 - 11246

identification algorithm ψ_b and, if necessary, the parameters of membership functions $d^{\theta}_{k1,l}, d^{\theta}_{k2,l}, l=\overline{1,m}$, by method of back error propagation ψ_{BP}.

In this case $x^*_{k1}(i),...,x^*_{km}, u^*(i)$, data are used, in which the output variable $y(i+1)$ is close to the nominal value, i.e. satisfies the condition

$$J^* = \left(\frac{1}{N} \sum_{i=1}^{N} \left(\left| y^H - y(x^*_k(i), u^*(i)) \right| \right) / y^H \right) \le J^H, \quad (2.9)$$

whre J^H - nominal value of relative regulation error.

Let's start with the algorithm for identifying the coefficients of linear equations $b^{\theta}_{kl}, \theta=\overline{1,n}, l=\overline{0,m}$, executed on set of data $x^*_{k1}(i),...,x^*_{km}, u^*(i)$, $i=\overline{1,N}$. Based on (2.5)-(2.7) we write (2.8) first in expanded form

$$u_k(i) = b^1_{k0}\beta^1_k(i) + ... + b^n_{k0}\beta^n_k(i) +$$
$$+ b^1_{k1}x^*_{k1}(i)\beta^1_k(i) + ... + b^n_{k1}x^*_{k1}(i)\beta^n_k(i) +$$
$$+ ... + b^1_k x^*_{km}(i)\beta^1_k(i) + ... + b^n_{km}x^*_{km}(i)\beta^i_k(i),$$

then in vector form

$$\boldsymbol{u_k}(\boldsymbol{i}) = \overline{\boldsymbol{b_k^T}}\,\overline{\tilde{\boldsymbol{x}}_{\boldsymbol{k}}}(\boldsymbol{i}), \quad (2.10)$$

where $\overline{\boldsymbol{b_k}} = \left[\boldsymbol{b^1_{k0}},...,\boldsymbol{b^n_{k0}},\boldsymbol{b^1_{k1}},...,\boldsymbol{b^n_{k1}},...,\boldsymbol{b^1_{km}},...,\boldsymbol{b^n_{km}}\right]^T$ - vector of adjustable coefficients,

$$\overline{\tilde{\boldsymbol{x}}_{\boldsymbol{k}}}(\boldsymbol{i}) = \left[\beta^1_{\boldsymbol{k}}(\boldsymbol{i}),...,\beta^{\boldsymbol{n}}_{\boldsymbol{k}}(\boldsymbol{i}), \boldsymbol{x}^*_{\boldsymbol{k1}}(\boldsymbol{i})\beta^1_{\boldsymbol{k}}(\boldsymbol{i}),...,\boldsymbol{x}^*_{\boldsymbol{k1}}(\boldsymbol{i})\beta^{\boldsymbol{n}}_{\boldsymbol{k}}(\boldsymbol{i}),...,\boldsymbol{x}^*_{\boldsymbol{km}}(\boldsymbol{i})\beta^1_{\boldsymbol{j}},...,\boldsymbol{x}^*_{\boldsymbol{km}}(\boldsymbol{i})\beta^{\boldsymbol{n}}_{\boldsymbol{k}}\right]^{\boldsymbol{T}}$$

- advanced input vector; T- transpose sign.

Vector by model parameter $\overline{\boldsymbol{b_k}}(\boldsymbol{i}) = \left[\boldsymbol{b^1_{k0}}(\boldsymbol{i}),.,\boldsymbol{b^n_{k0}}(\boldsymbol{i}),\boldsymbol{b^1_{k1}}(\boldsymbol{i}),.,\boldsymbol{b^n_{k1}}(\boldsymbol{i}),.,\boldsymbol{b^1_{km}}(\boldsymbol{i}),.,\boldsymbol{b^n_{km}}\right]^{\boldsymbol{T}}$ for *i*-data set $\overline{\boldsymbol{x^*_k}}(\boldsymbol{i}), \boldsymbol{u}^*(\boldsymbol{i})$ defined as follows. Initial values of vector elements $\overline{\mathbf{b_\kappa}}(\mathbf{0}) = \mathbf{0}$ and adjustment matrix size $n(m+1)\times n(m+1)$ are set

$$H_k(0) = \begin{vmatrix} \alpha_k & 0 & ... & 0 \\ 0 & \alpha_k & ... & 0 \\ ... & ... & ... & ... \\ 0 & 0 & ... & \alpha_k \end{vmatrix},$$

where α_k - a sufficiently large number, which is chosen empirically.

For data set $\overline{\boldsymbol{x^*_k}}(\boldsymbol{i}), \boldsymbol{u}^*(\boldsymbol{i}), \boldsymbol{i}=1,2,...,\boldsymbol{N}$ correction matrix

$$H_k(i) = H_k(i-1) - \frac{H_k(i-1)\tilde{x}_k(i)\tilde{x}^T_k(i)H_k(i-1)}{1+\tilde{x}^T_k(i)H_k(i-1)\tilde{x}_k(i)} \quad (2.11)$$

and vector of coefficients are calculated

$$\overline{\boldsymbol{b_k}}(\boldsymbol{i}) = \overline{\boldsymbol{b_k}}(\boldsymbol{i}-1) + \boldsymbol{H_k}(\boldsymbol{i})\tilde{\boldsymbol{x}}_{\boldsymbol{k}}(\boldsymbol{i})(\boldsymbol{u}^*(\boldsymbol{i}) - \overline{\boldsymbol{b_k^T}}(\boldsymbol{i}-1)\tilde{\boldsymbol{x}}_{\boldsymbol{k}}(\boldsymbol{i})). \quad (2.12)$$

The sought value of the vector $\overline{\boldsymbol{b_k}}$ equal to $\overline{\boldsymbol{b_k}}(\boldsymbol{N})$.

The work of the structural identification algorithm Ψ_n begins with the selection of an fuzzy model with the minimum values of the criteria

$$\boldsymbol{J_k} = \frac{1}{\boldsymbol{N}} \sum_{\boldsymbol{i}=1}^{\boldsymbol{N}} \left(\left| \left(\boldsymbol{u}^*(\boldsymbol{i}) - \boldsymbol{u_k}\left(\overline{\boldsymbol{x^*_k}}(\boldsymbol{i}) \bullet \right) \right) \right| / \boldsymbol{u}^*(\boldsymbol{i}) \right) \quad (2.13)$$

from a certain number of presented models. If there is only one model, for example, at the first iteration, this procedure is not performed.

Received fuzzy model is further trained according to current data by directional variation of the coefficients $b^{\theta}_l, \theta=\overline{1,n}, l=\overline{0,m}$, by the multistep least squares method (2.11), (2.12) and the parameters of membership functions $d^{\theta}_{k1,l}, d^{\theta}_{k2,l}$ by the method of back propagation of error. The latter is to minimize the squared error

$$\boldsymbol{E_k}(\boldsymbol{i}) = 0.5\boldsymbol{e^2_k}(\boldsymbol{i}) = 0.5\left(\boldsymbol{u}^*(\boldsymbol{i}) - \boldsymbol{u_k}\left(\overline{\boldsymbol{d_k}}, \overline{\boldsymbol{x^*_k}}(\boldsymbol{i}) \right) \right)^2 \quad (2.14)$$

by gradient method according to the formula

$$d_k(\lambda+1)=d_k(\lambda)-\Delta d_k(\lambda)$$
(2.15)

with a work step $\Delta\overline{\boldsymbol{d_k}}=\boldsymbol{h_k}(\partial\boldsymbol{E_k}/\partial\overline{\boldsymbol{d_k}})$, where h_k work step parameter.

We write down the chain rule for determining the partial derivative

$$\frac{\partial \boldsymbol{E_k}}{\partial \overline{\boldsymbol{d}}^{\theta}_{\boldsymbol{kl}}}=\frac{\partial \boldsymbol{E_k}}{\partial \boldsymbol{u_k}}\frac{\partial \boldsymbol{u_k}}{\partial \boldsymbol{w}^{\theta}_{\boldsymbol{k}}}\frac{\partial \boldsymbol{w}^{\theta}_{\boldsymbol{k}}}{\partial \boldsymbol{X}^{\theta}_{\boldsymbol{kl}}}\frac{\partial \boldsymbol{X}^{\theta}_{\boldsymbol{kl}}}{\partial \overline{\boldsymbol{d}}^{\theta}_{\boldsymbol{kl}}}, \qquad (2.16)$$

where $\overline{\boldsymbol{d}^{\theta}_{\boldsymbol{kl}}}=(\boldsymbol{d}^{0}_{\boldsymbol{k1,l}},\boldsymbol{d}^{\theta}_{\boldsymbol{k2,l}})$ - two-element vector of sigmoid parameters (2.4).

We define each component of the partial derivative (2.16) using relations (2.4) - (2.8) and the model diagram in Fig. 2.

The first component is obtained from (2.14)

$$\frac{\partial E_k}{\partial u_k}=\left(u^*-u_k\right);$$

The second from (2.5) and (2.7)

$$\frac{\partial u_k}{\partial w^{\theta}_k}=\frac{u^{\theta}_k\sum_{j=1}^{n}w^i_k-w^{\theta}\sum_{j=1}^{n}w^j_k u^j_k}{\left(\sum_{j=1}^{n}w^j_k\right)}=\frac{u^{\theta}_k-w^{\theta}u_k}{\sum_{j=1}^{n}w^j_k};$$

The third from (2.6)

$$\frac{\partial w^{\theta}_k}{\partial X^{\theta}_{kl}(x_l)}=\prod_{\substack{j=1\\ j\neq l}}^{m}X^{\theta}_{kj}(x^*_{kj}),\ l=\overline{1,m};$$

The fourth is a derivative of sigmoid (2.4) by $d^{\theta}_{k1,l}$,

$$\frac{\partial X^{\theta}_{kl}}{\partial d^{\theta}_{k1,l}}=X^{\theta}_{kl}(x^*_{kl})(1-X^{\theta}_{kl}(x^*_{kl}))(x^*_{kl}+d^{\theta}_{k2,l})$$

Or by $d^{\theta}_{k2,l}$

$$\frac{\partial X^{\theta}_{kl}}{\partial d^{\theta}_{k2,l}}=X^{\theta}_{kl}(x^*_{kl})(1-X^{\theta}_{kl}(x^*_{kl}))d^{\theta}_{k1,l},$$

$$l=\overline{1,m},\qquad \theta=\overline{1,n}.$$

Now we write the analytic expression of partial derivatives by the parameter $d^{\theta}_{k1,l}$

$$\frac{\partial E_k}{\partial d^{i}_{k1,l}}=(u^*_k-u_k)\frac{(u^{\theta}_k-w^{\theta}_k u_k)}{\left(\sum_{j=1}^{n}w^j_k\right)^2}\times\left(\prod_{\substack{j=1\\ j\neq l}}^{m}X^{\theta}_{kj}(x^*_{kj})\right)X^{\theta}_{kl}(x^*_{kl})(1-X^{\theta}_{kl}(x^*_{kl}))(x^*_{kl}+d^{\theta}_{k2,l}) \qquad (2.17)$$

And by parameter $d^{\theta}_{k2,l}$

$$\frac{\partial E_k}{\partial d^{i}_{k2,l}}=(u^*_k-u_k)\frac{(u^{\theta}_k-w^{\theta}_k u_k)}{\left(\sum_{j=1}^{n}w^j_k\right)^2}\times\left(\prod_{\substack{j=1\\ j\neq l}}^{m}X^{\theta}_{kj}(x^*_{kj})\right)X^{\theta}_{kl}(x^*_{kl})(1-X^{\theta}_{kl}(x^*_{kl}))d^{\theta}_{k2,l}, \qquad (2.18)$$

$$\theta=\overline{1,n},\ l=\overline{1,m}.$$

An emulator is a simplified dynamic model of an object (Fig. 2)

$$\hat{\boldsymbol{y}}(\boldsymbol{i}+1)=\boldsymbol{f}_{\text{э}}(\boldsymbol{u}(\boldsymbol{i}),\ldots,\boldsymbol{u}(\boldsymbol{i}-\boldsymbol{q}),\ \overline{\boldsymbol{x}}(\boldsymbol{i}),\ldots,\overline{\boldsymbol{x}}(\boldsymbol{i}-\boldsymbol{s}),\boldsymbol{y}(\boldsymbol{i}),\ldots,\boldsymbol{y}(\boldsymbol{i}-\boldsymbol{r}),\overline{\boldsymbol{c}_{\text{э}'}}), \qquad (2.19)$$

Having the same order *q*, *s*, *r*, as well as (1.1), which after formalization of variables

$$\overline{\boldsymbol{x}_{\text{э}}}(\boldsymbol{i})=(\boldsymbol{x}_{\text{э}1}(\boldsymbol{i}),\ldots,\boldsymbol{x}_{\text{э}\boldsymbol{m}}(\boldsymbol{i}))=(\boldsymbol{u}(\boldsymbol{i}),\ldots,\boldsymbol{x}(\boldsymbol{i}),\ldots\boldsymbol{y}(\boldsymbol{i}-\boldsymbol{r}))$$

We also represent in the form of an fuzzy Sugeno model

$$R_э^\theta;\ if\ \ x_{э1}(i)\ is\ \ X_{э1}^\theta$$
$$x_{э2}(i)\ \text{is}\ \ X_{э2}^\theta,...,\ x_{эm}(i)\ \text{is}\ X_{эm}^\theta,$$
$$\text{then}\ \ y^\theta(i+1)=b_{э0}^\theta+b_{э1}^\theta x_{э1}(i)+...+b_{эm}^\theta x_{km}(i),\quad (2.20)$$
$$\theta=\overline{1,n'}.$$

We write the analytical expression of the fuzzy emulator

$$\hat{y}(i+1)=\sum_{\theta=1}^{n'}\beta_э^\theta y^\theta(i+1),\qquad (2.21)$$

where

$$\beta_э^\theta=w_э^\theta(i)/\left(\sum_{\theta=1}^{n'}w_э^\theta(i)\right);$$
$$w_э^\theta(i)=\prod_{l=1}^{m'}X_{эl}^\theta(x_{эl}(i)),$$

its vector representation

$$\hat{\boldsymbol{y}}(\boldsymbol{i}+1)=\overline{\boldsymbol{b}_э^{\boldsymbol{T}}}\tilde{\boldsymbol{x}}_э(\boldsymbol{i}),$$

as well as coefficient identification algorithm $\overline{\boldsymbol{b}_э}(\boldsymbol{i})$

$$H_э(i)=H_э(i-1)-\frac{H_э(i-1)\tilde{x}_э(i)\tilde{x}_э^T(i)H_э(i-1)}{1+\tilde{x}_э^T(i)H_э(i-1)\tilde{x}_э(i)},\qquad (2.22)$$

$$b_э(i)=b_э(i-1)+H_э(i)\tilde{x}_э(i)(y(i)-b_э^T(i-1)\tilde{x}_э(i)),$$
$$i=\overline{1,N},\qquad (2.23)$$

where $\tilde{x}_э(i)=(\beta_э^1(i),\ ...,\ \beta_э^{n'}(i),\ \beta_э^1(i)x_{э1}(i),\ ...,\beta_э^1(i)x_{эm'}(i),...,\beta_э^{n'}(i)x_{эm'}(i))^T$ - modified input vector; $\overline{\boldsymbol{b}_э}=(\boldsymbol{b}_{э0}^1(\boldsymbol{i}),...,\boldsymbol{b}_{э0}^{\boldsymbol{n}'}(\boldsymbol{i}),\boldsymbol{b}_{э1}^1(\boldsymbol{i}),...,\boldsymbol{b}_{э1}^{\boldsymbol{n}'}(\boldsymbol{i}),...,\boldsymbol{b}_{эm'}^1(\boldsymbol{i}),..\boldsymbol{b}_{эm'}^{\boldsymbol{n}'}(\boldsymbol{i}))^{\boldsymbol{T}}$ vector of adjustable parameters.

In structural identification, a common

$$J_э=\frac{1}{N+1}\sum_{i=0}^{N}\left(\left|y(i+1)-\hat{y}(i+1)\right|/y(i+1)\right)$$

criteria characterizing average relative errors is used.

Emulator membership function parameters $\overline{\boldsymbol{d}_э}=(\boldsymbol{d}_{э1,l}^\theta,\boldsymbol{d}_{э2,l}^\theta),\boldsymbol{l}=1,\boldsymbol{m}',\theta=\overline{1,\boldsymbol{n}'},$ determined by the back propagation error method by minimizing the squared residual

$$\boldsymbol{E}_э(\boldsymbol{i}+1)=0.5\boldsymbol{e}_э^2(\boldsymbol{i}+1)=0.5(\boldsymbol{y}(\boldsymbol{i}+1)-\hat{\boldsymbol{y}}(\overline{\boldsymbol{d}_э},\overline{\boldsymbol{x}_э}(\boldsymbol{i})))^2$$

by gradient descent

$$d_э(\lambda+1)=d_э(\lambda)-h_э\left(\frac{\partial E_э}{\partial d_э}\right),\qquad (2.24)$$

where $h_э$ - work step parameter. We give analytic expressions of partial derivatives by the parameter $d_{э1,}^\theta l$

$$\frac{\partial E_э}{\partial d_{э1,l}} = (y-\hat{y})\frac{(y - w_э^\theta \hat{y})}{\left(\sum_{j=1}^{n'} w_э^j\right)^2} \times \left(\prod_{\substack{j=1\\ j\neq l}}^{m'} X_{эl}^\theta(x_{эl}))(x_{эl} + d_{э2,l}^\theta\right) \qquad (2.25)$$

and by parameter $d_{э2,}^\theta l$

$$\frac{\partial E_э}{\partial d_{э2,l}} = (y-\hat{y})\frac{(y - w_э^\theta \hat{y})}{\left(\sum_{j=1}^{n'} w_э^j\right)^2} \times \left(\prod_{\substack{j=1\\ j\neq l}}^{m'} X_{эj}^\theta(x_{эj})\right)(1 - X_{эl}^\theta(x_{эl}))d_{э1,l}^\theta, \qquad (2.26)$$

$$l = \overline{1,m'}, \quad \theta = \overline{1,n'}.$$

Parametric and structural identification ceases when the condition

$$J_э = \frac{1}{N}\sum_{i=0}^{N}\left(\left|y(i+1) - \hat{y}(i+1)\right| / y(i+1)\right) \le J_э^н, \text{ is met}$$

where $J_э$ - average relative error of the emulator with a valid value $J_э^н$.

Suppose that the control object described by equation (1.1) is reversible, i.e. there is a function $f_p(\bullet)$, called the regulator model, such that

$$\begin{aligned} &\boldsymbol{u_p(i) = f_p(u_p(i-1),\ldots,u_p(i-q),}\\ &\boldsymbol{\overline{x}(i),\ldots,\overline{x}(i-s),\hat{y}(i+1),\ldots,\hat{y}(i-r),y^н,\overline{c_p}).} \end{aligned} \qquad (2.27)$$

Turning to formalized notation

$$\begin{aligned} &\boldsymbol{x_p(i) = (x_{p1}(i), x_{p2}(i),\ldots,x_{pm''}(i)) =}\\ &\boldsymbol{= u_p(i-1),\ldots,u_p(i-q),\overline{x}(i),\ldots,\overline{x}(i-s),\hat{y}(i+1),\ldots,\hat{y}(i-r),y^н).} \end{aligned}$$

we write (4.1) as an fuzzy Sugeno model

$$\text{if } x_{p1}(i) \text{ is } X_{p1}^\theta,\ldots, x_{pm''(i)} \text{ is } X_{pm''}^\theta,$$

$$\text{then } u_p(i) = b_{p0}^\theta + b_{p1}^\theta x_{p1}(i) + \ldots + b_{pm''}^\theta x_{pm''}(i),$$

$$\theta = \overline{1,n''},$$

We will use algorithms for parametric and structural identification, as well as a sigmoidal membership function

$$X_p(x_p) = (1 + \exp(d_{p1}(x_p - d_{p2})))^{-1}.$$

Therefore, the vector of controller settings will include the vectors of coefficients of linear equations

$$\boldsymbol{\overline{b_p} = (b_{p0}^1,\ldots,b_{p0}^{n''},b_{p1}^1,\ldots,b_{p1}^{n''},\ldots,b_{pm''}^1,\ldots,b_{pm''}^{n''})}$$

and parameters of the membership function

$$\boldsymbol{\overline{d_p} = (d_{p1,1}^1,d_{p2,1}^1,\ldots,d_{p1,m''}^1,d_{p2,m''}^1,\ldots,d_{p1,1}^{n''},d_{p2,1}^{n''},\ldots,d_{p1,m''}^{n''},d_{p2,m'}^{n''}).}$$

Without conclusion, we give an analytical expression of the Sugeno model

$$u_p(i) = \frac{\sum_{\theta}^{n''} w_p^\theta(i) u_p^\theta(i)}{\sum_{\theta=1}^{n''} w_p^\theta(i)} \qquad (2.28)$$

and its vector form

$$\boldsymbol{u_p}(\boldsymbol{i}) = \overline{\boldsymbol{b_p^T}}\,\tilde{\boldsymbol{x}}_{\boldsymbol{p}}(\boldsymbol{i}), \qquad (2.29)$$

where $\tilde{x}_p^T(i) = \left[\beta_p^1(i),...,\beta_p^{n''}(i), x_{p1}(i)\beta_p^1(i),...,x_{p1}\beta_p^{n''}(i), x_{pm''}(i)\beta_p^1(i),...,x_{pm''}(i)\beta_p^{n''}(i)\right]$- advanced input vector;

$$\beta_p^\theta(i) = w_p^\theta(i) / \left(\sum_{\theta=1}^{n''} w_p^\theta(i)\right)$$

-fuzzy function.

The structure and parameters of the inverse model of the controller (2.28) are identified in two stages. At the first stage, according to the emulator model (2.21), by the one-dimensional search algorithm at the points $i = \overline{1, N}$ are determined such controls $u^*(i) = u_p^*(i) + u_k(i)$ and, accordingly, regulatory influences $u_p^*(i)$, under which the emulator error $e_э(i+1) = y(i+1) - \hat{y}(i+1)$ satisfies the restrictions

$$\delta y_{\min} \le \left|l_э(i+1)\right| \le \delta y_{\max}, \; i = \overline{0, N-1}. \qquad (2.30)$$

At the second stage, structural identification and identification of the coefficients of linear equations $\overline{\boldsymbol{b_p}}$ and parameters of membership functions $\overline{\boldsymbol{d_p}}$ are carried out. The coefficient vector is calculated using the recursive least squares method.

$$H_p(i) = H_p(i-1) - \frac{H_p(i-1)\tilde{x}_p(i)\tilde{x}_p^T(i)H_p(i-1)}{1 + \tilde{x}_p^T(i)H_p(i-1)\tilde{x}_p(i)} \qquad (2.31)$$

$$\overline{\boldsymbol{b_p}}(\boldsymbol{i}) = \overline{\boldsymbol{b_p}}(\boldsymbol{i}-1) + \boldsymbol{H_p}(\boldsymbol{i})\tilde{\boldsymbol{x}}_{\boldsymbol{p}}(\boldsymbol{i})[\boldsymbol{u_p^*}(\boldsymbol{i}) - \overline{\boldsymbol{b_p^T}}(\boldsymbol{i}-1)\tilde{\boldsymbol{x}}_{\boldsymbol{p}}(\boldsymbol{i})],$$
$$\boldsymbol{H_p}(0) = \gamma \boldsymbol{I}, \; \gamma >> 1, \; \boldsymbol{i} = \overline{1, \boldsymbol{N}}, \qquad (2.32)$$

Here, the criterion of adequacy is

$$J_p = \frac{1}{N}\sum_{i=0}^{N}\left(\left|u_p^*(i) - u_p(i)\right| / \left|u_p^*(i)\right|\right),$$

Structural and parametric identification is completed when the condition

$J_p \le J_p^н$ is met

where $J_p^н$ - nominal value of regulation error.

We will define the parameters of the membership functions of the controller $d_{p1,l}^\theta, d_{p2,l}^\theta, \theta = \overline{1, n''}, l = \overline{1, m''}$, training it how to manage with a minimum quadratic error $E = 0.5e^2(i+1) = 0.5(y^н - \hat{y}(i+1))^2$ using the gradient method

$$d_p(\lambda+1) = d_p(\lambda) + \Delta d_p(\lambda), \qquad (2.33)$$

where $\Delta\overline{\boldsymbol{d_p}} = (\boldsymbol{h_p}\partial \boldsymbol{E} / \partial\overline{\boldsymbol{d_p}})$ - work step, h_p -parameter of work step.

, For a sequentially connected controller and emulator, the partial derivatives, according to the chain rule, will have the form

$$\frac{\partial \boldsymbol{E}}{\partial \overline{\boldsymbol{d_p}}} = \frac{\partial \boldsymbol{u_p}}{\partial \overline{\boldsymbol{d_p}}}\frac{\partial \hat{\boldsymbol{y}}}{\partial \boldsymbol{u_p}}\frac{\partial \boldsymbol{E}}{\partial \hat{\boldsymbol{y}}}.$$

By analogy with (3.7) and (3.8), we give without derivation the expressions of partial derivatives by the parameter $d_{p1,l}^\theta$

The structure and parameters of the inverse model of the controller (2.28) are identified in two stages. At the first stage, according to the emulator model (2.21), by the one-dimensional search algorithm at the points $i = \overline{1, N}$ are determined such controls $u^*(i) = u_p^*(i) + u_k(i)$ and, accordingly, regulatory influences $u_p^*(i)$, under which the emulator error $e_э(i+1) = y(i+1) - \hat{y}(i+1)$ satisfies the restrictions

$$\delta y_{\min} \le \left|l_э(i+1)\right| \le \delta y_{\max}, \; i = \overline{0, N-1}. \qquad (2.30)$$

At the second stage, structural identification and identification of the coefficients of linear equations $\overline{\boldsymbol{b_p}}$ and parameters of membership functions $\overline{\boldsymbol{d_p}}$ are carried out. The coefficient vector is calculated using the recursive least squares method.

$$H_p(i) = H_p(i-1) - \frac{H_p(i-1)\tilde{x}_p(i)\tilde{x}_p^T(i)H_p(i-1)}{1+\tilde{x}_p^T(i)H_p(i-1)\tilde{x}_p(i)}, \qquad (2.31)$$

$$\begin{gathered}\overline{\boldsymbol{b_p}}(\boldsymbol{i}) = \overline{\boldsymbol{b_p}}(\boldsymbol{i}-1) + \boldsymbol{H_p}(\boldsymbol{i})\tilde{\boldsymbol{x}}_{\boldsymbol{p}}(\boldsymbol{i})[\boldsymbol{u}_{\boldsymbol{p}}^*(\boldsymbol{i}) - \overline{\boldsymbol{b}_{\boldsymbol{p}}^{\boldsymbol{T}}}(\boldsymbol{i}-1)\tilde{\boldsymbol{x}}_{\boldsymbol{p}}(\boldsymbol{i})], \\ \boldsymbol{H_p}(0) = \gamma \boldsymbol{I},\ \gamma >> 1,\ \boldsymbol{i} = \overline{1, \boldsymbol{N}},\end{gathered} \qquad (2.32)$$

Here, the criterion of adequacy is

$$J_p = \frac{1}{N}\sum_{i=0}^{N}\left(\left|u_p^*(i) - u_p(i)\right| / \left|u_p^*(i)\right|\right),$$

Structural and parametric identification is completed when the condition

$$J_p \le J_p^н \text{ is met}$$

where $J_p^н$ - nominal value of regulation error.

We will define the parameters of the membership functions of the controller $d_{p1,l}^{\theta}, d_{p2,l}^{\theta}, \theta = \overline{1,n''}, l = \overline{1,m''},$ training it how to manage with a minimum quadratic error $E = 0.5e^2(i+1) = 0.5(y^н - \hat{y}(i+1))^2$ using the gradient method

$$d_p(\lambda+1) = d_p(\lambda) + \Delta d_p(\lambda), \qquad (2.33)$$

where $\Delta\overline{\boldsymbol{d_p}} = (\boldsymbol{h_p}\partial\boldsymbol{E}/\partial\overline{\boldsymbol{d_p}})$ - work step, h_p -parameter of work step.

For a sequentially connected controller and emulator, the partial derivatives, according to the chain rule, will have the form

$$\frac{\partial \boldsymbol{E}}{\partial \overline{\boldsymbol{d_p}}} = \frac{\partial \boldsymbol{u_p}}{\partial \overline{\boldsymbol{d_p}}}\frac{\partial \hat{\boldsymbol{y}}}{\partial \boldsymbol{u_p}}\frac{\partial \boldsymbol{E}}{\partial \hat{\boldsymbol{y}}}.$$

By analogy with (3.7) and (3.8), we give without derivation the expressions of partial derivatives by the parameter $d_{p1,l}^{\theta}$

$$\frac{\partial u_p}{\partial d_{p1,l}^{\theta}} = \frac{u_p^{\theta} - w_p^{\theta}u_p^{\theta}}{\sum_{j=1}^{n''} w_p^j} \times \left(\prod_{\substack{j=1\\ j\neq 1}}^{m''} X_{pj}^{\theta}(x_{pj})\right) X_{pl}^{\theta}(x_{pl})(1 - X_{pl}^{\theta}(x_{pl}))(x_{pl} + d_{p2,l}^{\theta}) \qquad (2.34)$$

and by the parameter $d_{p2,l}^{\theta}$

$$\frac{\partial u_p}{\partial d_{p2,l}^{\theta}} = \frac{u_p^{\theta} - w_p^{\theta}u_p^{\theta}}{\sum_{j=1}^{n''} w_p^j} \times \left(\prod_{\substack{j=1\\ j\neq 1}}^{m''} X_{pj}^{\theta}(x_{pj})\right) X_{pl}^{\theta}(x_{pl})(1 - X_{pl}^{\theta}(x_{pl}))d_{p2,l}^{\theta}, \qquad (2.35)$$

$$\theta = \overline{1,n''},\ l = \overline{1,m''}.$$

Taking constant u_k, and considering that $u_p = x_{э1}$, i.e. $du_p = d(u_k + u_p) = dx_{э1}$, we define the analytical expression of the Jacobian of the object $\partial\hat{y}(i+1)/\partial x_{э1}(i)$, which is the sum of the derivatives of the products of two functions β^θ and $\hat{y}^\theta$

$$\frac{\partial\hat{y}_i}{\partial x_{э1}} = \sum_{\theta=1}^{n'}\left(\frac{\partial\beta^\theta}{\partial x_{э1}}y^\theta + \frac{\partial y^\theta}{\partial x_{э1}}\beta^\theta\right). \qquad (2.36)$$

In accordance with the chain rule, we write the full derivative of the first term

$$\frac{\partial\beta_э^\theta}{\partial x_{э1}}y^\theta = \frac{\partial\beta_э^\theta}{\partial w_э^\theta}\frac{\partial w_э^\theta}{\partial X_{э1}^\theta}\frac{\partial X_{э1}^\theta}{\partial x_{э1}}y^\theta$$

and define the first

$$\frac{\partial\beta_э^\theta}{\partial x_э^\theta}y^\theta = \frac{y^\theta - w_э^\theta\hat{y}}{\sum_{j=1}^{n'} w_э^j},$$

the second

$$\frac{\partial w_э^\theta}{\partial x_{э1}} = \prod_{l=2}^{m'} X_{эl}^\theta(x_{эl})$$

and the third component

$$\frac{\partial X_{э1}^\theta(x_{э1})}{\partial x_{э1}} = X_{э1}^\theta(x_{э1})(1 - X_{э1}^\theta(x_{э1}))\,d_{э1,1}^\theta,$$

where $X_{э1}^\theta(x_{э1}) = (1+\exp(d_{э1}^\theta(x_{э1} + d_{э1,2}^\theta)))^{-1}$.

The second term of the derivative (2.36) has the form

$$\frac{\partial y^\theta}{\partial x_{э1}}\beta_э^\theta = b_{эl}^\theta\beta_э^\theta.$$

Now we write the full expression of the derivative (2.36)

$$\frac{\partial\hat{y}}{\partial x_{э1}} = \sum_{\theta=1}^{n'}\left[\frac{y^\theta - w_э^\theta\hat{y}}{\sum_{j=1}^{n'} w_э^j}\times\prod_{l=2}^{m'} X_{эl}^\theta(x_{эl})(1 - X_{э1}^\theta(x_{э1}))d_{э1}^\theta + b_{э1}^\theta\beta_э^\theta\right]. \qquad (2.37)$$

Parameters $\overline{b_p}$ and $\overline{c_p}$ are considered found if the average relative control error

$$J = \frac{1}{N}\sum_{i=1}^{N}\left(\left|y^н - y(i)\right| / y^н\right),$$

satisfies the condition $J \le J^н$, where $J^н$ is the nominal value of the regulation error.

RESULTS AND DISCUSSION

To analyze the operation of the proposed system, a computer experiment was presented. Adaptive ARS acts on the task channel g = 0.7. Transients from the output of an fuzzy adaptive ARS and a typical fuzzy ARS without an adapter are shown in Figure 3

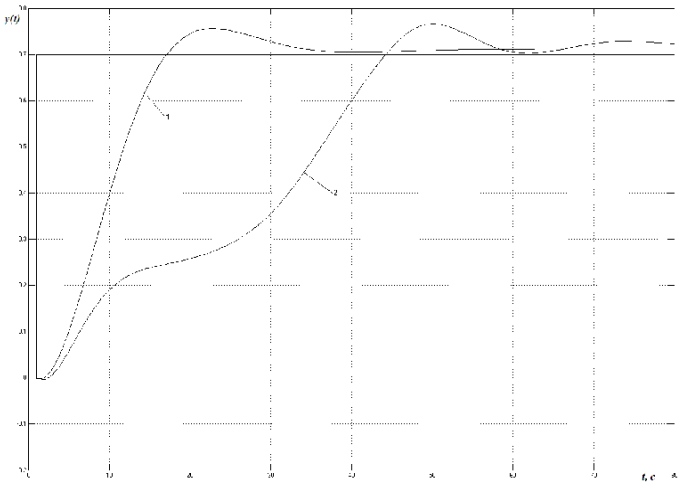

Fig. 3. Transients on the reference channel under the influence of the channel of external disturbances: 1 - adaptive neuro-fuzzy ARS; 2 - typical fuzzy ARS

A comparative analysis of aperiodic transients showed the advantage of an adaptive system with Tp = 35 sec. compared to a typical fuzzy ARS, the regulation time of which was Tp = 80 sec. In the diagram, a trained neural network performs the function of recognizing the values of Tp and G1, and also extrapolates these values

CONCLUSION

A neuro-fuzzy adaptive control system for a nonlinear dynamic object containing a compensator,

regulator, and emulator based on the fuzzy Sugeno model is proposed. Algorithms for structural and parametric identification of the Sugeno model are developed. An algorithm for adapting the models of the compensator and the regulator in real time is synthesized, which is a combination of the algorithm for identifying the coefficients of linear equations and the method of back error propagation that determines the parameters of membership functions.

Thus, the combination of the positive properties of neural networks and fuzzy models allows us effectively solving the problems of control the complex dynamic objects in the conditions of uncertainty.

REFERENCES

1. Iserman R. //. Digital control systems. M .: Mir. 1984. 541 pages
2. Omatu S., Khalid M., Yusof R. Neurocontrol and its applications. Kn. M .: IPRZhR, 2000. 272 pages
3. Asai K., Watada D., Ivan S. et al. Applied fuzzy systems. M .: Mir, 1993.368 pages
4. Sugeno M. An introductory survey of fuzzy control// Inform. Sci. 1985 No. 36. pp. 59-83.
5. Brandt, R. Adaptive interaction and its application to neural networks // Information Sciences, 1999(121), pp. 201-215.
6. Medvedev, V. et al. Synthesis of adaptive neurocomputer control systems based on the theory of adaptive identification // Mehanika, Automation and control, 2004(10), pp. 27-33.
7. A method of robustly, neuro-fuzzy and adaptive control // Under the editorship of Egupov. M.: MSTU named from N.E. Bauman, 2002. -744 pages.
8. Samigulina GA, Samigulina Z.I. Intellectual data analysis for industrial automation systems based on artificial immune systems // Vestnik of the National Technical University "Kharkov Polytechnic Institute". - Kharkov: NTU "KhPI", 2013. - № 19. - pp. 139-145.
9. Lee J. Shung W., Kim E., Kim S. A new genetic structure of the Bayesian networks: matrix genetic algorithm // International Journal of Control, Automation and Systems. - Korean Institute of Electrical Engineers, 2010. - №4. - P. 398 - 407.
10. Popova E.I. Solution of systems of nonlinear algebraic equations by hybrid genetic algorithms // Intellectual systems in production. -Izhevsk, 2011. - №2. - P. 33-40.
11. Miroshnik IV, Nikiforov VO, Fradkov AL Nonlinear and adaptive control of complex dynamic systems. // SPb .: Science, 2000.- 549 c.
12. Vyalykh, I.A. Fuzzy control of the reactor unit of the catalytic cracking unit / IA. Vyalykh, S.N. Kondrashov, A.G. Shumikhin //Automation in the industry. - 2010. - No. 7. - P. 53-57.
13. Yusupbekov N.R., Aliyev R.A., Aliyev R.R., Yusupbekov A.N. Intellectual control systems and making decision. - Tashkent: GNI "Uzbekiston milliy enciklopediyasi ", 2014. - 490 pages.
14. Siddikov I.X. Synthesis of Neuro-Fuzzy controller for dynamic objects under conditions of uncertainty//The Advanced Science Journal.USA, Volume 2014 Issue 2. pp.33-37.
15. Siddikov I.X., Umurzakova D.M. Mathematical modeling of transient processes of the automatic control system of water level in the steam generator// Universal Journal of Mechanical Engineering, 2019 Issue 7. pp.146-153
16. Siddikov I.X., Umurzakova D.M. Features of automatic control of technological parameters of water level in the drum steam boilers // Journal of Southwest Jiaotong University, Volume 54.No3, 2019.