March-April 2020
ISSN: 0193-4120 Page No. 6792 - 6796

Estimation of Rock Mass by the Ultrasonic Method for Determining the Degree of Inhomogeneity

Yastrebova Karina Namidinovna, Moldovan Dmitriy Vladimirovich and Chernobay Vladimir Ivanovich
St. Petersburg Mining University, 2, 21st Line, St Petersburg 199106, Russia
St. Petersburg Mining University, 2, 21st Line, St Petersburg 199106, Russia, ORCID 0000-0003-2227-6625
St. Petersburg Mining University, 2, 21st Line, St Petersburg 199106, Russia, ORCID 0000-0002-6858-8854

Article Info
Volume 83
Page Number: 6792 - 6796
Publication Issue:
March - April 2020

Article History
Article Received*: 24 July 2019*
Revised*: 12 September 2019*
Accepted*: 15 February 2020*
Publication*: 05 April 2020*

Abstract:
The task of determining the homogeneity of the rock mass, as well as its fracturing and blocking, is always an important task in mining, regardless of the method of development of the field. The quality of the extracted mineral will depend on how these parameters are determined, and most importantly, the reliability and stability of the mine workings, and therefore the health and life of the workers. It is difficult to solve this problem for several reasons: the first is the constantly changing geological conditions in connection with the advancement of the front of mining or tunneling. The second problem is the complexity of the measurements themselves inside the mass. The speed of the wave can be determined by the time it takes to travel through a given distance. In practice, such a problem is difficult to solve, due to large errors, since access to them is possible only through wells. The paper shows the possibility of determining the heterogeneity coefficient of a mass of wells by the ultrasonic method using a three-point measuring scheme.

Keywords: *wave speed, mass inhomogeneity, ultrasound, rock jointing, sensors, wave speed.*

I. INTRODUCTION

The approach to studying the heterogeneity of the rock mass depends on various factors, including the fracturing and blocky structure of the mass itself. With systemic fracturing of deposits, three systems of cracks are usually observed, and structural blocks are close in shape to a parallelepiped, the diameter of which can be the largest rib [1]. In this case, the necessary empirical information is provided by measurements of the distance between cracks in the system with a minimum crack frequency [2].

By the nature of the networks of cracks, systemic, chaotic, and polygonal fractures are distinguished [3]. With systemic fracturing, the rock mass is dissected by several systems of parallel crack planes. If the cracks do not unite into systems and are randomly oriented in space, then the fracturing is called chaotic. Polygonal systems of cracks break the natural massif into structural blocks that are close in shape to polyhedra [4].

A quantitative characteristic of fracturing is the frequency of cracks (the average number of cracks crossing a unit length segment). This characteristic as a function of direction in space may have a significant variation. In this case, the fracturing is anisotropic [5] and determines the seismic anisotropy of the natural massif. If the variation of is insignificant (random), then the fracture is isotropic [4, 6].

The measurement of the distance between cracks in systems is often difficult and sometimes not possible. Therefore, the linear method is most often used, consisting in measuring the distance between the tracks of cracks on a straight line, that is, in determining the length of the segments of the intersection of a straight line with structural blocks.

II. HOW TO SOLVE THE PROBLEM

To solve a wide range of practical problems [7, 8, 9], the ultrasonic method for studying the properties and condition of rocks is widely used. These methods are characterized by a wide variety of methodological techniques in obtaining primary information, which are determined by the specifics of the tasks being solved. Despite this, the basic information obtained from the devices, in most cases are data on the propagation speed of ultrasonic waves. By the degree of change in the speed of passage of the wave, one can judge the properties of

March-April 2020
ISSN: 0193-4120 Page No. 6792 - 6796

the rocks, as well as the heterogeneity of the mass.

To assess the heterogeneity of the mass, one needs to study the intensity of the manifestation of the scale effect in relation to the speed of passage of ultrasonic waves through the rock. Any natural massif is an anisotropic medium, as it is penetrated by a system of cracks, has natural blocking, as well as impregnations and impurities of other minerals. The study of such a sample will be based on the dependence of the speed of ultrasonic waves on the direction of their propagation.

A mass is considered homogeneous if the propagation speed of the leading edge of the elastic wave does not depend on its direction of distance traveled. Then the coefficient of heterogeneity of the mass is determined as follows:

$$n = \frac{V_{\max} - V_{\min}}{V_{\max}}, \qquad (1)$$

where $V_{\max}$ and $V_{\min}$ - the maximum and minimum values of the velocities of ultrasonic waves in the studied area.

The speed of passage of an ultrasonic wave [10, 11] is determined, as a rule, by the time of its passage through a certain distance in advance known. In practice, determining the distances between two sensors is difficult and significantly affects the measurement error, since access to them is possible only through wells. Therefore, the task of determining the heterogeneity of the mass, excluding the determination of measuring the distances between wells, is of great interest in science.

We write expression (1) in the following form:

$$n = 1 - \frac{V_{\max}}{V_{\min}} = 1 - \frac{S_1 / t_1}{S_2 / t_2} = 1 - \frac{S_1 / S_2}{t_1 / t_2}, \qquad (2)$$

Where S_1 - distance between points at which speed is minimum;

S_2 – distance between points at which speed is maximum;

t_1 and t_2 - ultrasound transit time through distances S1 and S2, respectively.

From the equation (2) it follows that the coefficient of heterogeneity is determined under the condition

$$\frac{S_i / S_j}{t_i / t_j} = \min$$

where i, j - indices of different points in the mass.

For the experiment, we will choose the following scheme (Fig.1) of measurements in the rock mass: a radiator 1 is installed in one well, sensors 2 and 3 are placed in another, so we connect the emitter and the receiver by segments of straight lines so that they form a right triangle with the vertex of the straight angle at the second sensor.

Denote the distance from the emitter 1 to the receiver 2 by the letter h, from the emitter 1 to the receiver 3 - S, the distance between the receivers 2 and 3 - a, the angle between the hypotenuse S and the leg a- α.

Let's assume that the mass is homogeneous within the specified triangle. Then

$$S = \frac{a}{\cos\alpha} = \frac{a}{\sqrt{1-\sin^2\alpha}} = \frac{a}{\sqrt{1-\left(\frac{n}{S}\right)^2}} = \frac{a}{\sqrt{1-\left(\frac{Vt_h}{Vt}\right)^2}} = \frac{a}{\sqrt{1-\left(\frac{t_h}{t}\right)^2}} \qquad (3)$$

Where V – speed of ultrasonic waves; t_h - time required for an ultrasonic wave to pass distance h. According to (3),

$$S_i / S_j = \frac{\frac{a_i}{\sqrt{1-\left(\frac{t_h}{t_i}\right)^2}}}{\frac{a_j}{\sqrt{1-\left(\frac{t_h}{t_j}\right)^2}}} = \frac{a_i}{a_j} \cdot \frac{t_i}{t_j} \cdot \sqrt{\frac{t_j^2 - t_h^2}{t_i^2 - t_h^2}};$$

or (4)

$$\frac{S_i / S_j}{t_i / t_j} = \frac{a_i}{a_j} \cdot \sqrt{\frac{t_j^2 - t_h^2}{t_i^2 - t_h^2}}.$$

March-April 2020
ISSN: 0193-4120 Page No. 6792 - 6796

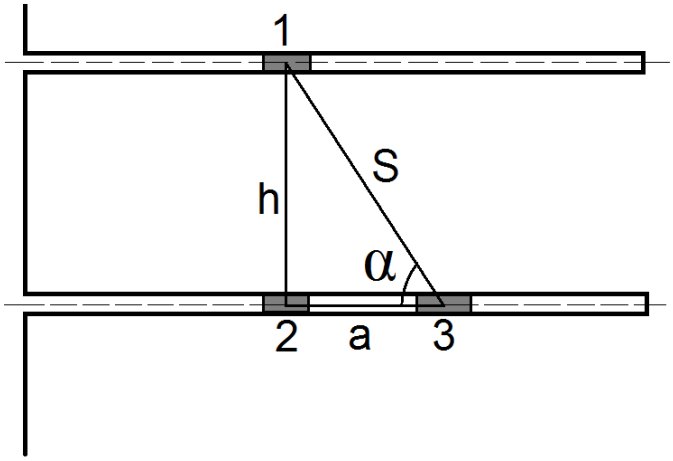

Figure 1. Diagram how to measure homogeneity of the mass

In a homogeneous mass, the ratio of the distance between different points is equal to the ratio of the time that elastic waves travel through these distances.

Thus,

$$\frac{S_i / S_j}{t_i / t_j} = 1$$

Or according to (4),

$$\frac{a_i}{a_j} = \sqrt{\frac{t_j^2 - t_h^2}{t_i^2 - t_h^2}} = 1, \qquad (5)$$

For an inhomogeneous mass, equality (5) will be violated. Moreover, according to (2), the heterogeneity coefficient for the selected section can be determined provided

$$n = 1 - \frac{a_i}{a_j} \cdot \sqrt{\frac{t_j^2 - t_h^2}{t_i^2 - t_h^2}}, \qquad (6)$$

In (6) it is not difficult to determine values and for receiving sensors are in the same well and can be installed on the same bar. Therefore, to determine only the measurement of the transit time of the ultrasound from the emitter to various sensors is required. In practice, the coefficient of heterogeneity of the mass is determined as follows. In one of two wells, a radiator is installed at the required distance from the wellhead. In another well, the bar is moved with three receiving sensors installed at the same distance.

III. RESULTS

If the transit time of the ultrasound from the emitter to the extreme sensors is equal, the middle sensor is installed at the apex of the right angle of the triangle. First, the smallest possible distance between the receiving sensors is set (depending on the resolution of the time meter). Then the central sensor is left stationary, and the extreme sensors are moved along the well. The distance between the central and extreme sensors is determined, the ultrasound transit time from the emitter to the receiving sensors is measured and a table is created, or a plot of the dependence

$$f(\alpha) = 1 - \frac{a_i}{a_j} \cdot \sqrt{\frac{t_j^2 - t_h^2}{t_i^2 - t_h^2}}$$

Laboratory measurements were performed on samples from the following rocks:
- granites;
- biotites;
- gabbro-dioritis.

On reference samples in laboratory conditions for three types of rocks, the results of the passage of ultrasonic waves are obtained, presented in Figure 2.

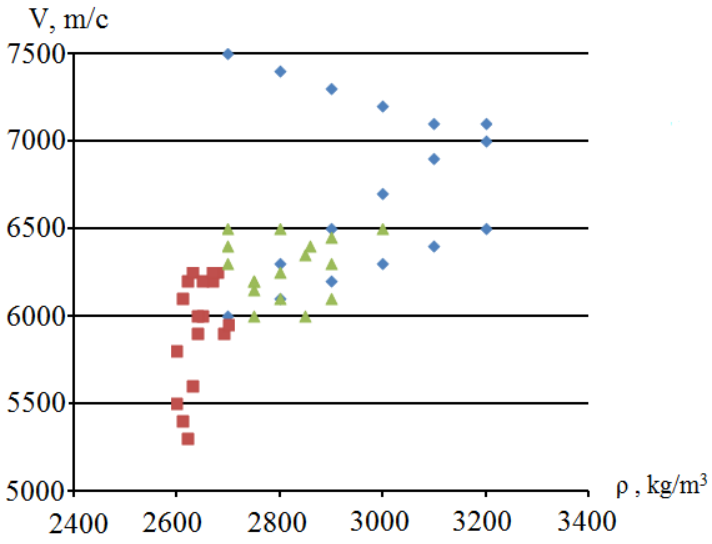

Figure 2. The dependence of the speed of the ultrasonic wave on the density of the sample (■ - biotite, ▲ – gabbro-dioritis, ♦ - granite)

March-April 2020
ISSN: 0193-4120 Page No. 6792 - 6796

Further, mods were made from the breed, in which measurements were made of the standardly used measurement method and above the proposed one. Comparative results are given in Figure 3.

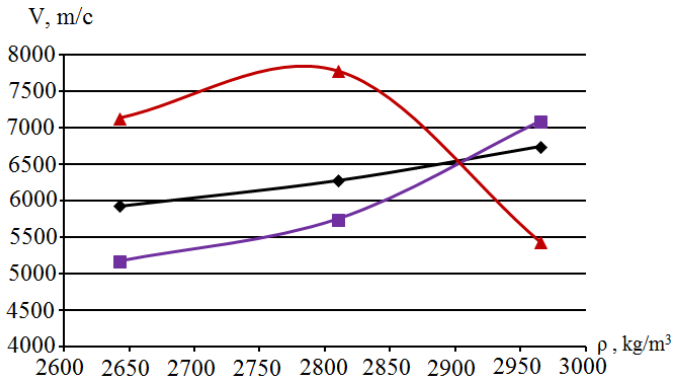

Figure 3. Comparison of the values of the speed of passage of an ultrasonic wave through a sample with various measurement methods (♦ - laboratory "reference" method, ▲ – common measurement method, ■ – method proposed for use)

IV. Conclusions

As can be seen from the graphs, this approach for mass heterogeneity allows determining the integrity of the mountain mass with minimal errors.

When measured by this method, the initial conditions may vary, the angle of inclination of the wells may vary, the distance between the axis of the wells and the sensors also varies. Therefore, this method is universal and sometimes does not require the drilling of two wells, if there is already one, the only condition is that the geometry of the right triangle.

V. REFERENCES

1. Biryukov A.V. Granulometry of natural blocking rocks (1992) Mining Magazine, No.12. p. 78-83.
2. Li, G., Li, G., Wang, Y., Qi, S., Yang, J. A rock physics model for estimating elastic properties of upper Ordovician-lower Silurian mudrocks in the Sichuan Basin, China (2020) Engineering Geology, 266, article No.105460, DOI: 10.1016/j.enggeo.2019.105460.
3. Beogo, Cedric Elisee, et al. "Preliminary results measuring the gamma dose rate distribution in north eastern Burkina Faso where the concentration of uranium in the soil is elevated." International Journal of Applied and Natural Sciences (IJANS) 8.5 (2019): 1-8.
4. Zhou, X.P., Bi, J., Deng, R.S., Li, B. Effects of brittleness on crack behaviors in rock-like materials (2020) Journal of Testing and Evaluation, 48 (4), article No.JTE20170595, DOI: 10.1520/JTE20170595.
5. Preparata S., Sheimos M. Computational geometry (1989) Moscow, Mir, p. 472.
6. Laxmi, h. Deepa, and b. Sujatha. "a novel approach to lip segmentation for visual speech recognition."
7. Kim, G., Jang, J., Kim, K.Y., Yun, T.S. Characterization of orthotropic nature of cleavage planes in granitic rock (2020) Engineering Geology, 265, article No.105432, DOI: 10.1016/j.enggeo.2019.105432.
8. Al-Shayea, N.A. Effects of testing methods and conditions on the elastic properties of limestone rock (2004) Engineering Geology, 74 (1-2), pp. 139-156. DOI: 10.1016/j.enggeo.2004.03.007.
9. Rzhevskiy V.V., Yamshchikov V.S. Acoustic methods for the study and control of rocks in the mass (1973) Moscow, Nauka p. 224.
10. Yilmaz, Betül, Caner Özdemir, and Ali Akdağli. "Detection and Localization of a Moving Person behind the Wall based on Bilateration Technique." Int. Journal of Electrical and Electronics Engineering (IJEEE) 6.1 (2017): 2278-9944.
11. Savich A.I. Seismic-acoustic methods for studying rock masses. – Moscow, Nedra, 1969.
12. Khan, K., Al-Shayea, N.A. Effect of specimen geometry and testing method on mixed Mode I-II fracture toughness of a limestone rock from Saudi Arabia (2000) Rock Mechanics and Rock Engineering, 33 (3), pp. 179-206. DOI: 10.1007/s006030070006.
13. Ghosh, Niloy, Amit Malakar, and Koumudi Chakravarty. "A simulation study of forced vibration analysis of solar buoy structure."
14. Benavente, D., Galiana-Merino, J.J., Pla, C., Martinez-Martinez, J., Crespo-Jimenez, D. Automatic detection and characterisation of the first P- and S-wave pulse in rocks using ultrasonic transmission method (2020) Engineering Geology, 266, article No.105474, DOI: 10.1016/j.enggeo.2020.105474.

15. Moustafa, Nasser a. "Active speckle photography method using Fourier transform for measuring the thickness of a Transparent plate."
16. Kurchin G.S. The influence of the form of geological contact on the value of losses during mining of near-contact zones/G.S. Kurchin, S.A. Vokhmin, A.A. Kytmanov//Notes of the Mining Institute. 2017. V. 223. p. 37-43. DOI 10.18454/PMI.2017.1.37.
17. Yousef, Hesham A., et al. "Determination of the radon concentrations in some building materials using passive technique." Intern. J. Phys. Res., 5 (2) 35 46 (2015).